ASSEMBLY MANUAL ›

RAZOR R9+

Record serial number

Elite R9+ Razor Rowing Machine

Thank you for purchasing the **Elite R9+ Razor Rower machine.**

For over 20 years, Elite Fitness™ has been New Zealand's largest supplier of fitness equipment. Our aim and vision is to provide you Elite™ branded products, tested to the highest standard for quality and biomechanics at the best possible price.

Please read through this manual to familiarise yourself with the operation of your new **Elite R9+ Rowing Machine.** Doing so will help to insure that you get the most out of your machine, enjoying a safe and effective workouts ahead.

Even though we go to great efforts to ensure the quality of each product we produce, occasional errors and or omissions do occur. In any event should you find this product to have either a defective or a missing part, please contact us for a replacement.

SERVICE & WARRANTY

For service and warranty assistance please visit: **www.elitefitness.co.nz/service**
Online forms are available for Service, Warranty and Parts requests.
(09) 258 9067 Service.
(09) 258 9070 Parts.

Elite Fitness HQ

28 Morrin Road
St Johns,
Auckland, New Zealand

info@elitefitness.co.nz
0800 2 438 348
www.elitefitness.co.nz

CONTENTS

Important Safety Instructions	**3**
Product Specifications	**4**
Assembly Instructions	**5-13**
Storage & Transportation	**14-15**
Care & Maintenance	**16-17**
Limited Warranty	**18**
Console	19-31
Warm up Exercise + Technique	**32-33**
Training Stages	**34**
Parts List	**35-36**
Exploded Drawing	**37**

IMPORTANT SAFETY INSTRUCTIONS

The following definition applied to the word “WARNING” when used in this manual:

⚠WARNING Used to call attention to POTENTIAL hazards that could result in personal injury or loss of life.

READ ALL INSTRUCTIONS BEFORE USING THE MACHINE

This product has been designed for home use only. Product liability and warranty conditions will not be applicable to products being subjected to professional use or products being used in a commercial environment. e.g Gym Centre

This exercise machine is built for optimum safety. However, certain precautions apply whenever you operate a piece of exercise equipment. Be sure read the entire manual before you assemble or operate your machine. In particular, note the following safety precautions.

— Read all instructions in this manual before using this equipment.

— Use the machine only for its intended use as described in this Manual.

— Inspect and tighten all the loose parts before this equipment is used.

— Keeps hands away from moving parts.

— Keep children and pets away from the machine at all time. DO NOT leave children unattended in the same room with the machine.

— Before using the machine to exercise, always do stretching exercises to properly warm up.

— Inspect the machine before each use; make sure all of the connections are tightly secured.

— Only one person at a time should use the machine.

— If the user experiences dizziness, nausea, chest pain, or any other abnormal symptoms, STOP the workout at once. **CONSULT A PHYSICIAN IMMEDIATELY.**

— Position the machine on a clear, levelled surface. DO NOT use the machine near water or outdoors.

— Always wear appropriate workout clothing when exercising. DO NOT wear robes or other clothing that could become caught in the machine. Sporting shoes are recommended when using the machine.

— Do not place any sharp object around the machine.

— Disabled persons should not use the machine without a qualified person or physician in attendance.

— Never operate the machine if the machine is not functioning properly.

— Only carry out training work on the equipment when it is in perfect working order. Only use original spare parts in the event of a repair.

— Do not use strong solvents for cleaning, and only use the tools supplied, or suitable ones of your own, for any repairs that may be required. Please dispose of the packaging and any parts that have to be replaced subsequently (all parts for the unit) at suitable collecting points or containers with a view to saving the environment.

— Not for therapeutic use.

WARNING: Before beginning any exercise program, consult your physician. This is especially important for persons with pre-existing health problems. The seller assumes no responsibility for personal injury or property damage sustained by or through the use of this product.

SERVICE HINTS: The high quality standard of this product only will be kept if you on a regular basis check all screw-connections and moving parts on proper fitting. Damaged parts have to be changed immediately. During the time of repair the product must not be used by anybody.

IMPORTANT HINTS:

A) This product has been tested in accordance with the requirements of EN 957-1/A1, EN 957-5, standard, Class HA (HOME USE). The maximum load is limited to 130KGS.

B) Parents should be aware of the risk factor of young children playing on fitness equipment unattended. Make sure that the children are instructed properly in the use of the product and in the controlled execution of the different exercise. Misuse of the product could result in serious injury

PRODUCT SPECIFICATIONS

User Weight Capacity:	130kg
Dimensions:	2450 x 460 x 1063 mm
Shipping Weight:	41.3kg
Net Weight:	36.4kg
Power Requirements	DC 6V 1.0A Adaptor

ASSEMBLY INSTRUCTIONS

STEP 1

Clear a 2 x Metre by 2.5 Metre working space before unpacking your R9+ Razor Rower Machine.

STEP 2

Open the carton as shown in the diagram below. NOTE: To protect the Rower while assembling we suggest that you do not remove the Protective Packing Material until it is absolutely necessary.

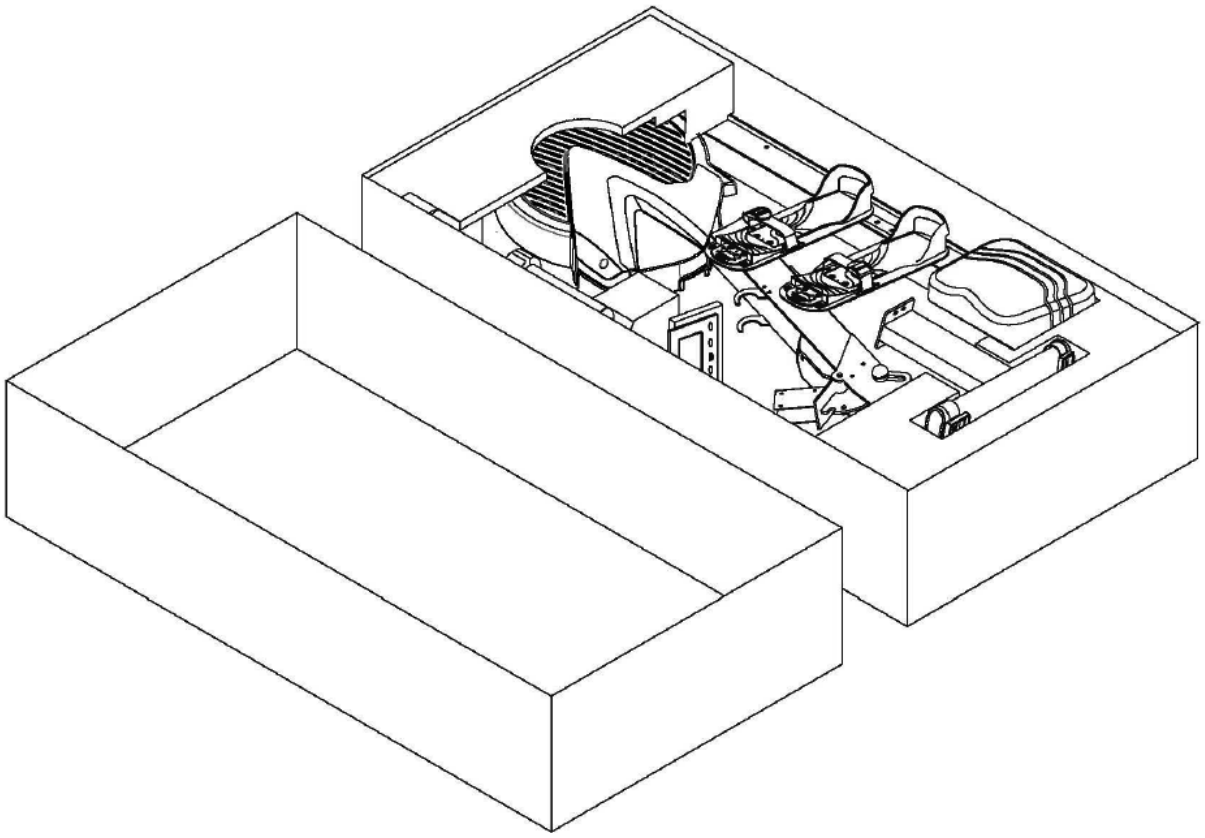

STEP 3

a) Remove the partly assembled rower from the carton lid and place it the correct way up as shown in the diagram below.

b) Remove the safety strap holder and discard. Place the handle bar in it's holder.

c) Remove 2 x bolt [84] from main frame [2] and 2 x bolt [76] with the tool provided.

d) Assemble foot pedal [12]with the same 2 x bolt [84] with 2 x bolt [85] then tighten firmly.

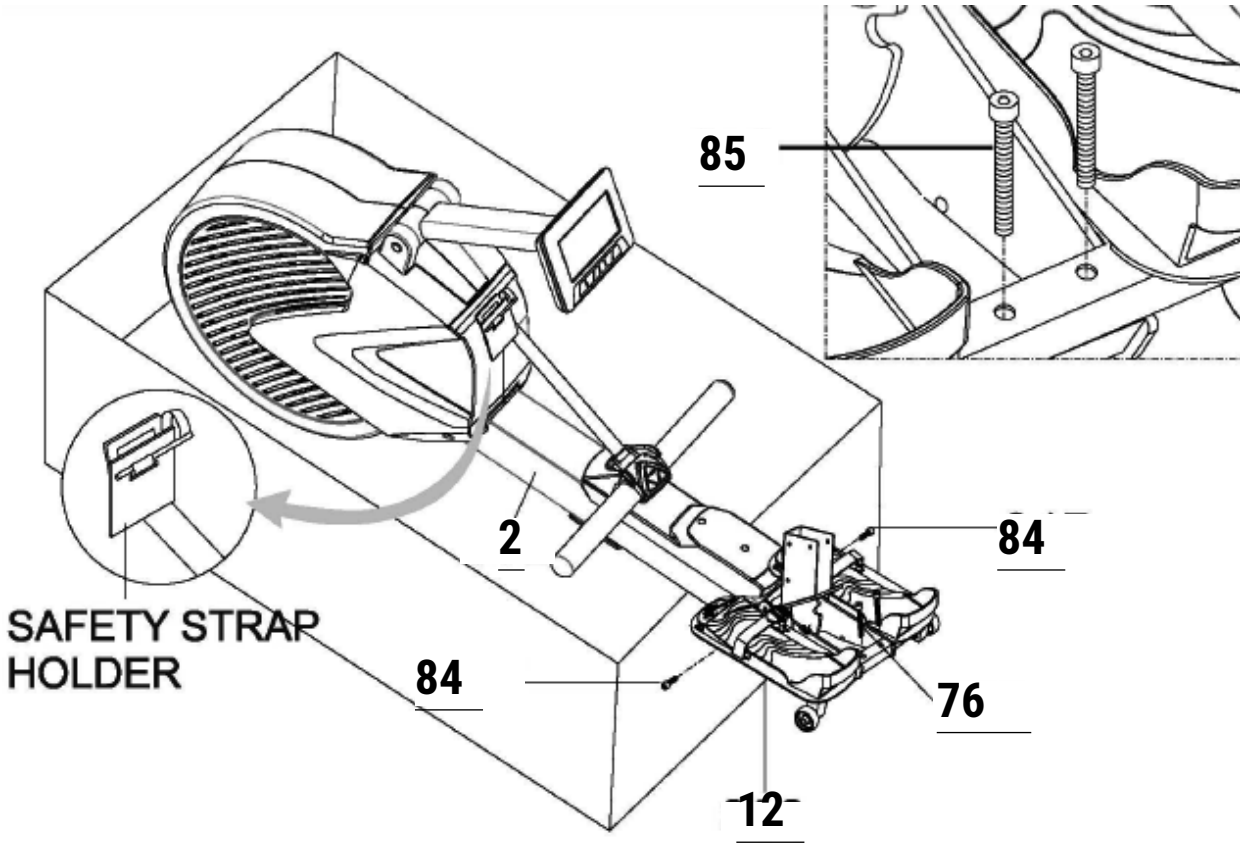

STEP 4

a) Turn over the Main frame [2] in the Carton Lid as shown in the diagram below.

b) Remove 4 x bolt [84] from main frame [2] with the tool provided.

c) Connect AC Adaptor cable [113] to AC cable [116].

d) Assemble the front stabiliser [4] with the same 4 x bolt [84] and tighten firmly. Before assembling make sure the [4] front stabiliser is not pressing the [113] AC adaptor cable & the [116] AC cable.

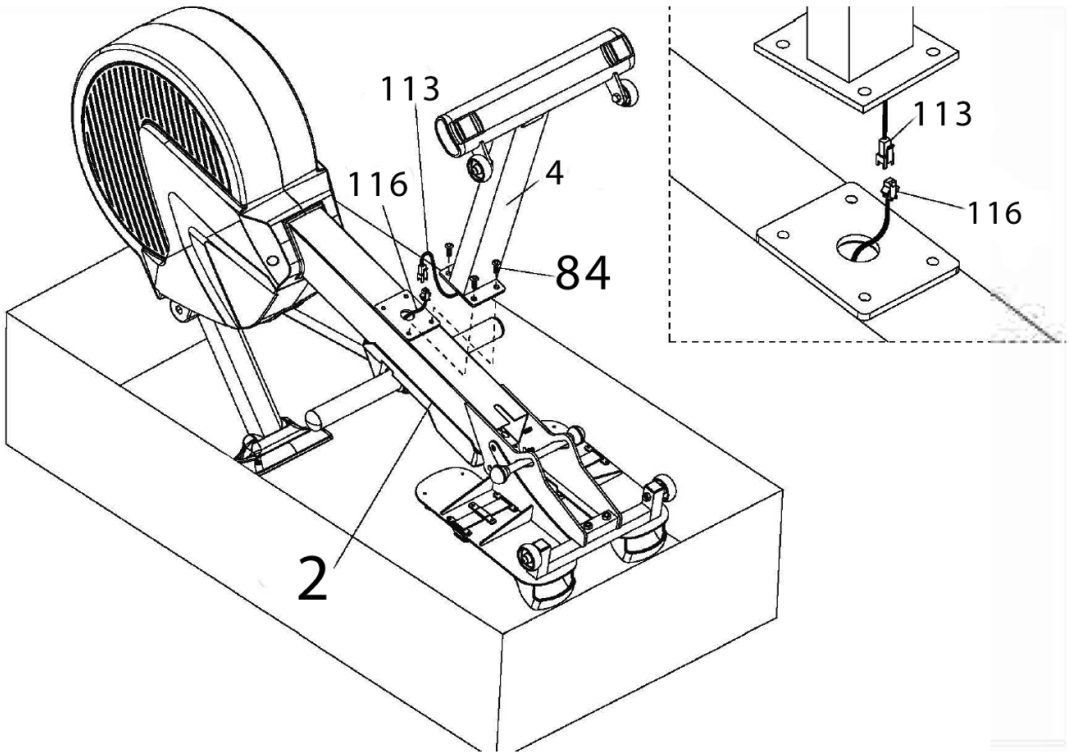

STEP 5

a) Remove the ALUMINIUM BEAM [1] from the carton and place ii on top of the carton lid as shown in the diagram below.

b) Remove 4 x BOLT [84] from ALUMINIUM BEAM [1] with the TOOL provided.

c) Assemble REAR STABILISER [6] with the same 4 x BOLT [84] and tighten firmly.

d) Remove the Cable Tie and discard.

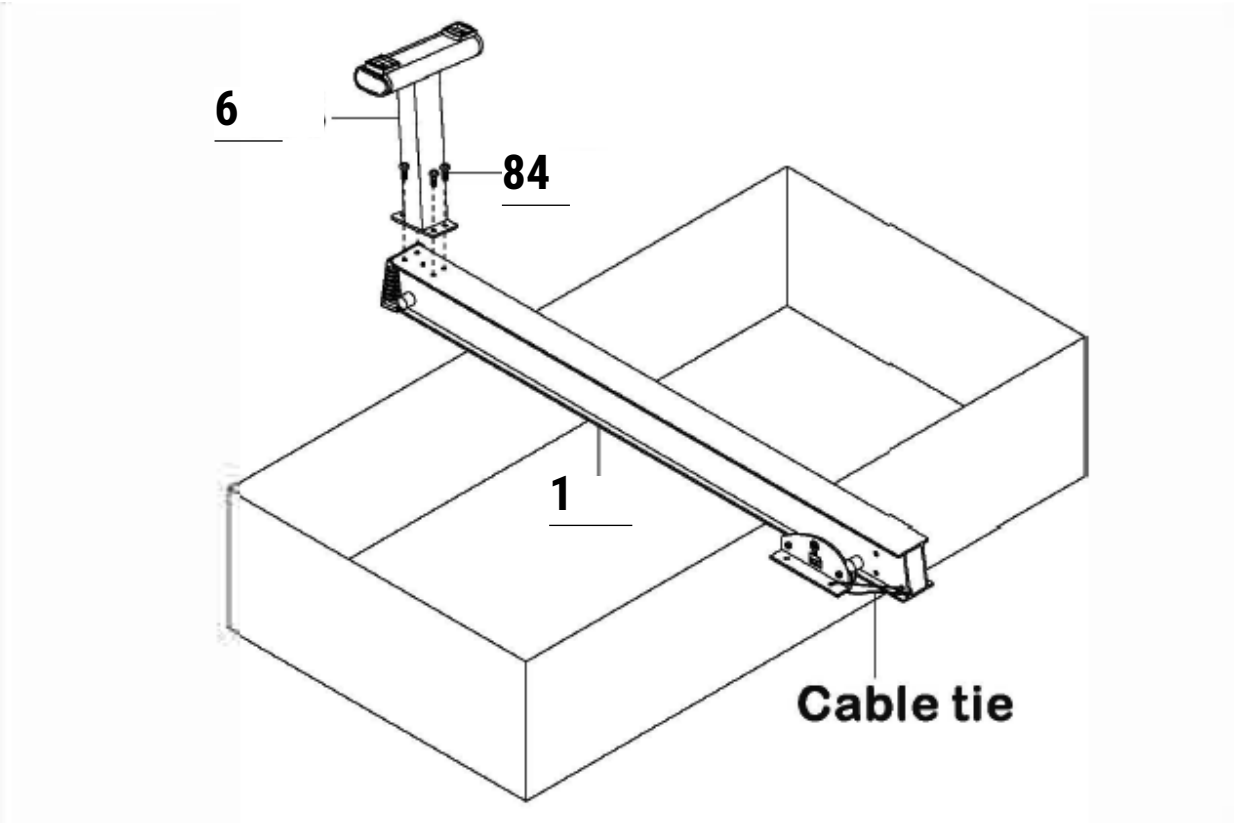

STEP 6

a) Remove 6 x bolt [74] from pivot bracket [3] with the tool provided.
b) Assemble the Aluminium beam [1] with the same 6 x bolt [74] and tighten firmly.

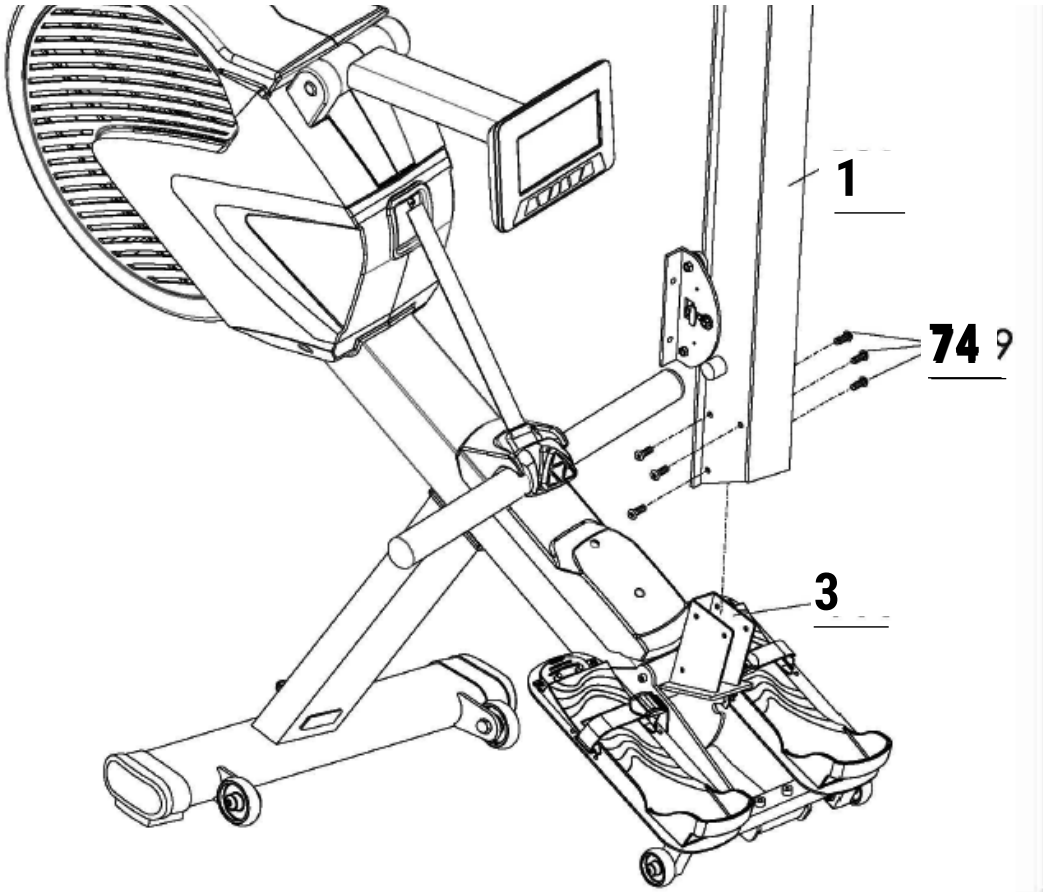

STEP 7

a) Remove 4 x bolt [74] from seat [34] with the tool provided.

b) Assemble seat [34] with the same 4 x bolt [74] and tighten firmly.

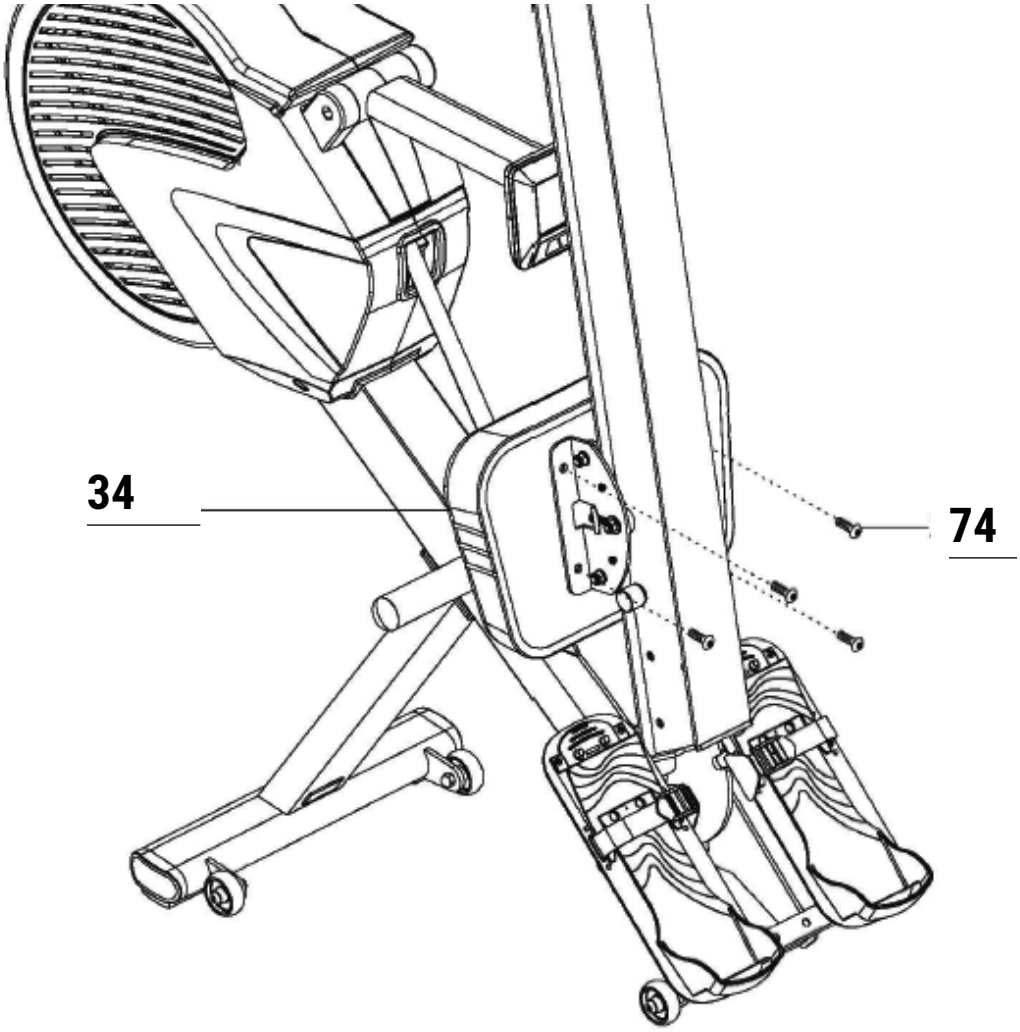

STEP 8

a) Remove 4 x bolt [72] from carriage with the tool provided.

b) Assemble 2 x seat carriage cover [14] with the same 4 x bolt[72] and tighten firmly.
NOTE: Ensure that the 2 x [14] seat carriage cover engage correctly into each other as shown in the diagram below.

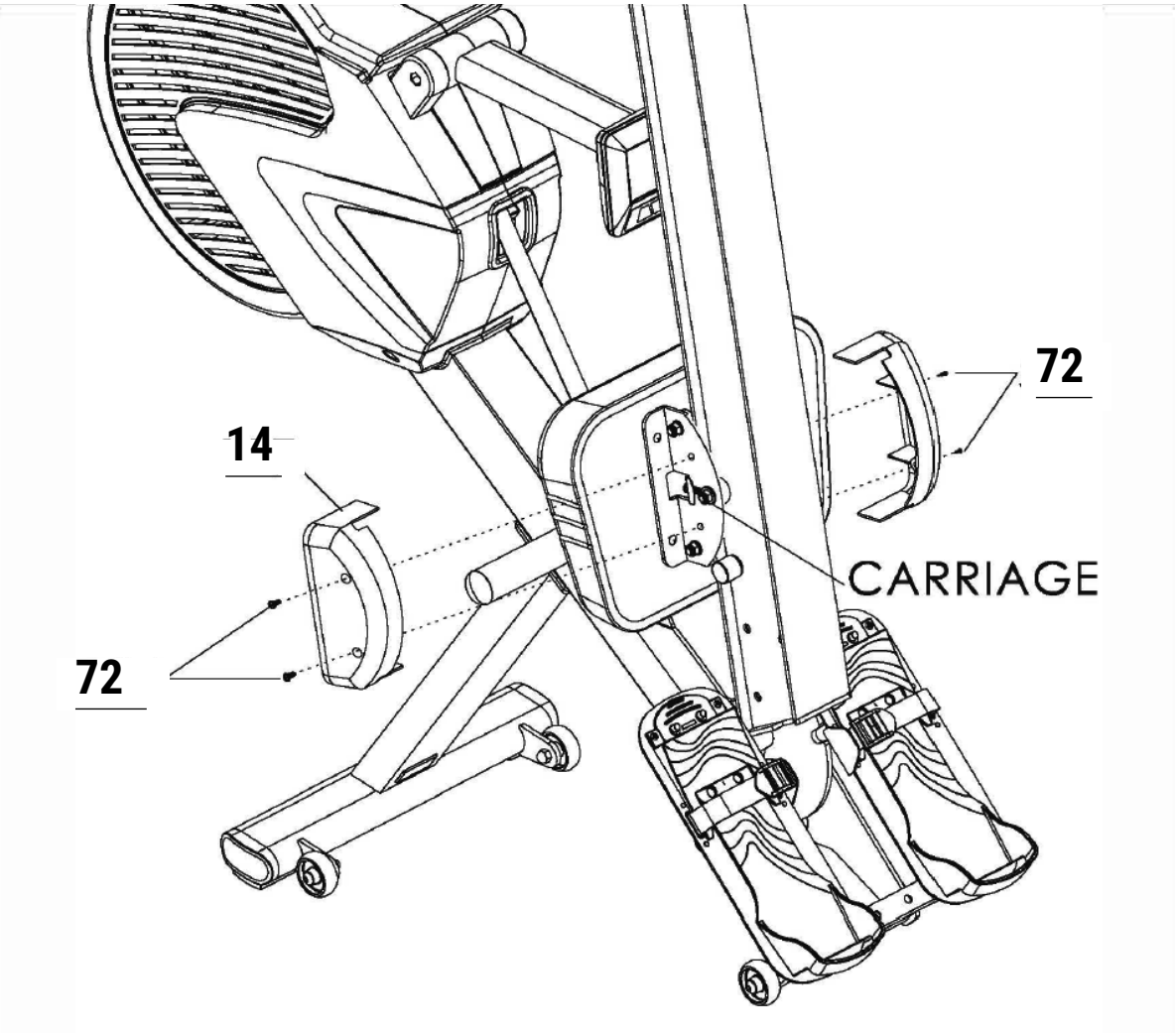

STEP 9

a) Connect the AC adaptor [115] into the main power socket.

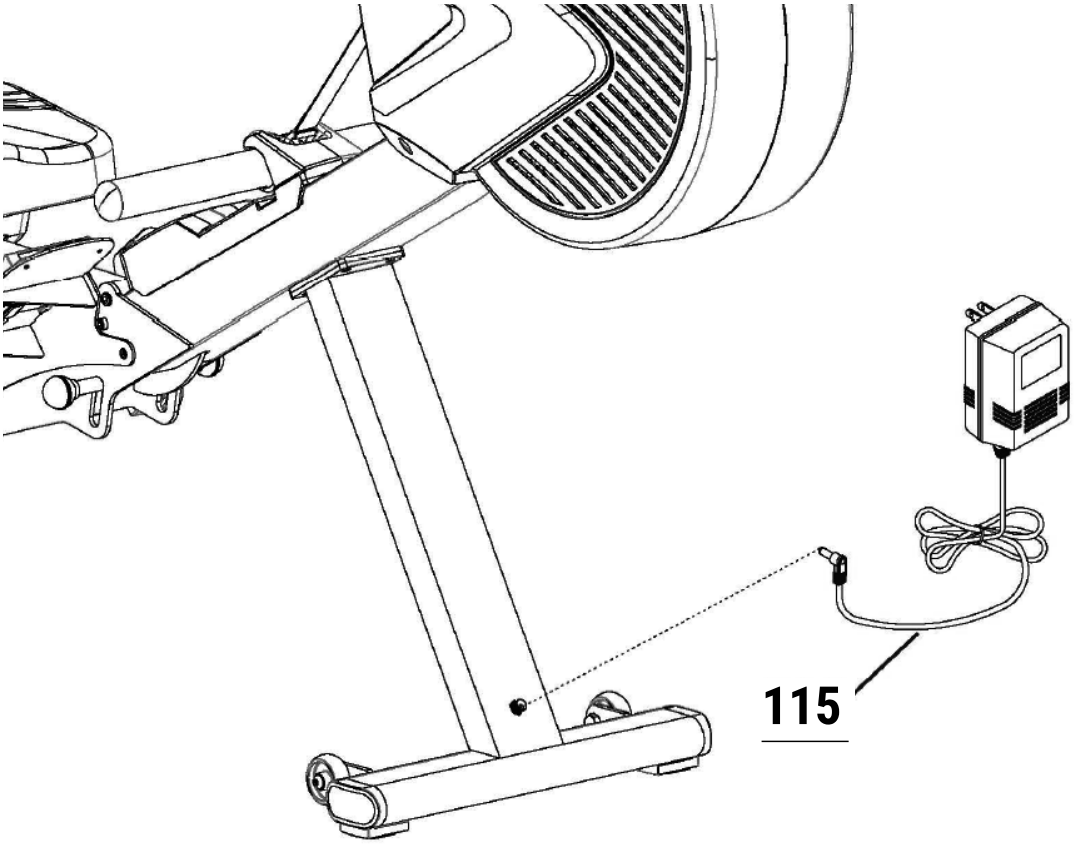

CONGRATULATIONS

Assembly of your **Elite R9+ Rowing Machine** is now complete! Be sure to fully inspect your machine before using it for the first time.

⚠WARNING

Failure to visually check and test and tech the assembly before use can cause damage to the **Elite R9+ Rowing machine** and serious injury to users and bystanders and can also compromise the effectiveness of your exercise program.

ADJUSTMENT GUIDE & STORAGE INSTRUCTIONS

MOVING THE MACHINE

1) With the rower in a flat position, use your right hand to grip the FOLD HANDLE and with your left hand release the LOCKING BAR by pushing it down (See Fig 1)

2) Now lift the ALUMINIUM BEAM (1) to the upright position, making sure you hear the locking mechanism engage. (see Fig 2)

3) Once locked and balanced, you can transport the bike to the desired location with ease.

WARNING: In the upright position, the rowing machine be knocked over so place it in a safe location to avoid injury or damage.

FIG. 1

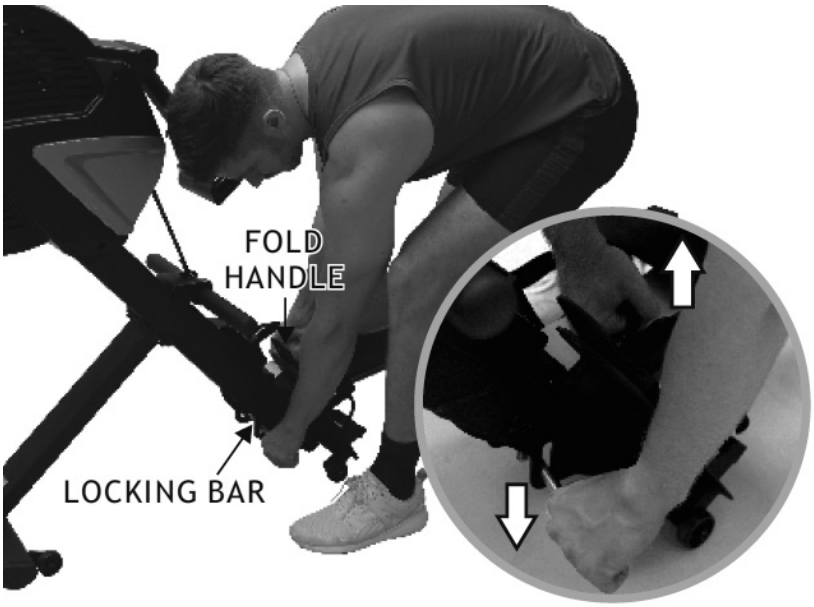

FIG. 2

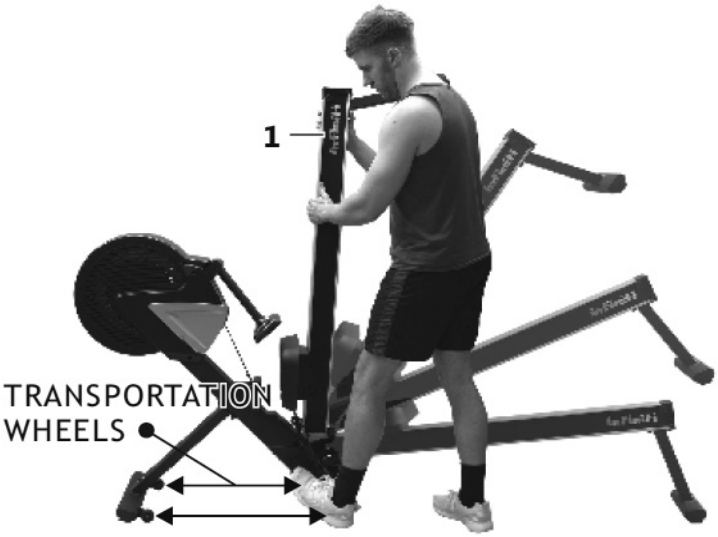

UNFOLDING

1) Position yourself on the left side of the rower and with your right hand take a firm grip of the ALUMINIUM BEAM (1) as shown in Fig 3.

2) Use your left foot to release the locking mechanism by pushing down on the LOCKING BAR as shown in Fig 3, and then carefully lower the ALUMINIUM BEAM (1) to the floor.

3) Gripping the FOLD HANDLE, lift the rower locking mechanism until your hear and feel it ***LOCK,*** then release the FOLD HANDLE as shown in Fig 4.

FIG. 3

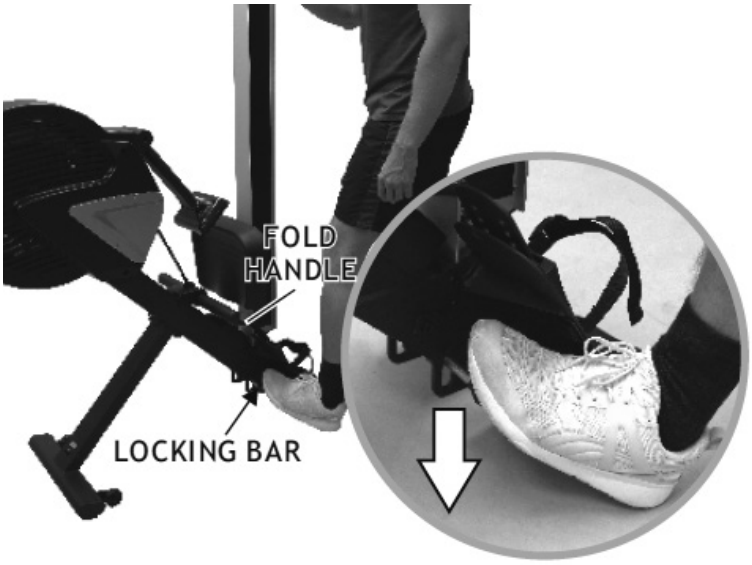

FIG. 4

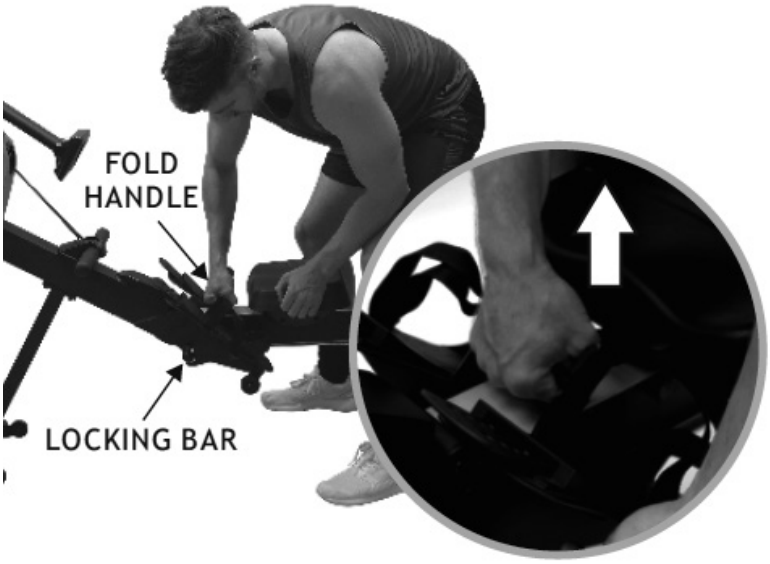

CARE AND MAINTENANCE

⚠WARNING

Before cleaning or carrying out any maintenance on your rowing machine, ensure the power is turned off and the power cord removed from the plug socket if required.

At least once a year, the shrouds on your rowing machine should be removed and any dust or debris vacuumed up to maintain the smooth operation of the motor and drive system. Contact the Elite Fitness Service Department for further information on servicing your rowing machine.

Prolong the life of your rowing machine by performing periodic maintenance checks. Not only does this ensure your machine is in full working order to ensure they continue to run smoothly and reliably, but it will save you service costs in the long run.

Cleaning

General cleaning of the unit after use will protect the rowers powder-coated framework and prevent unnecessary corrosion stains and damage to the structural components from sweat and perspiration. During this time check for any cracks and damage.

Guide Rail:

This area needs attention every week. It needs to be kept free of dust and debris. If the wheels roll over dust and debris it ingrains itself in either the wheel or the rail itself. Over time this will pit the wheels or guide rail making for a bumpy workout.

Chain:

If you have a chain attached to your rowing handle once every 6 months you should give it a light oiling. The chain should be free of build-up before re-greasing if it is dirty use an automotive degreaser and paper towel to remove the build-up.

To oil the chain; pull the chain to its full extent and while holding the handle use a clean paper towel to rub lubricant along the length of the chain. 3 in 1 oil or 20W motor oil are recommended. About 1 teaspoon of lubricant is plenty.

MAINTENANCE LOG

Prolong the life of your rowing machine by performing periodic maintenance checks. Not only does this ensure your machine is in full working order, but it will save you service costs in the long run.

Every time you perform maintenance, record the date and if you can, the distance and hours operated.

	DATE	HOURS	DISTANCE	FRAME			SERVICE COMMENTS
				Cleaned	*Joints*	*Guide Rail*	
eg:	01/06	15	16.5km	√	√	√	none

LIMITED WARRANTY

Warranty Registration

It is recommended you register your warranty online at www.elitefitness.co.nz/service/online-forms/warranty to ensure you receive the correct user maintenance information for your product before use. This will enable you to receive any additional or helpful information from the manufacturer or Elite Fitness Equipment about your product.

Warranty Range

Damage in correct maintenance and normal operations (not factitious factors). Warranty card to the original purchaser, shall not be transferred.

Warranty Time

HOME USE

— 10 Year Frame

— 1 Year Parts and Labour

The following conditions are not under warranty range:

a)As a result of abuse, neglect, accident, or unauthorized modification;

b)The damage due to incorrect adjustment of the machine;

Repair and Maintenance Service

Please contact our Elite Fitness Service Department at eliteservice@elitefitness.co.nz or visit www.elitefitness.co.nz for any service related issues or advice on preventative maintenance servicing procedures.

CONSOLE

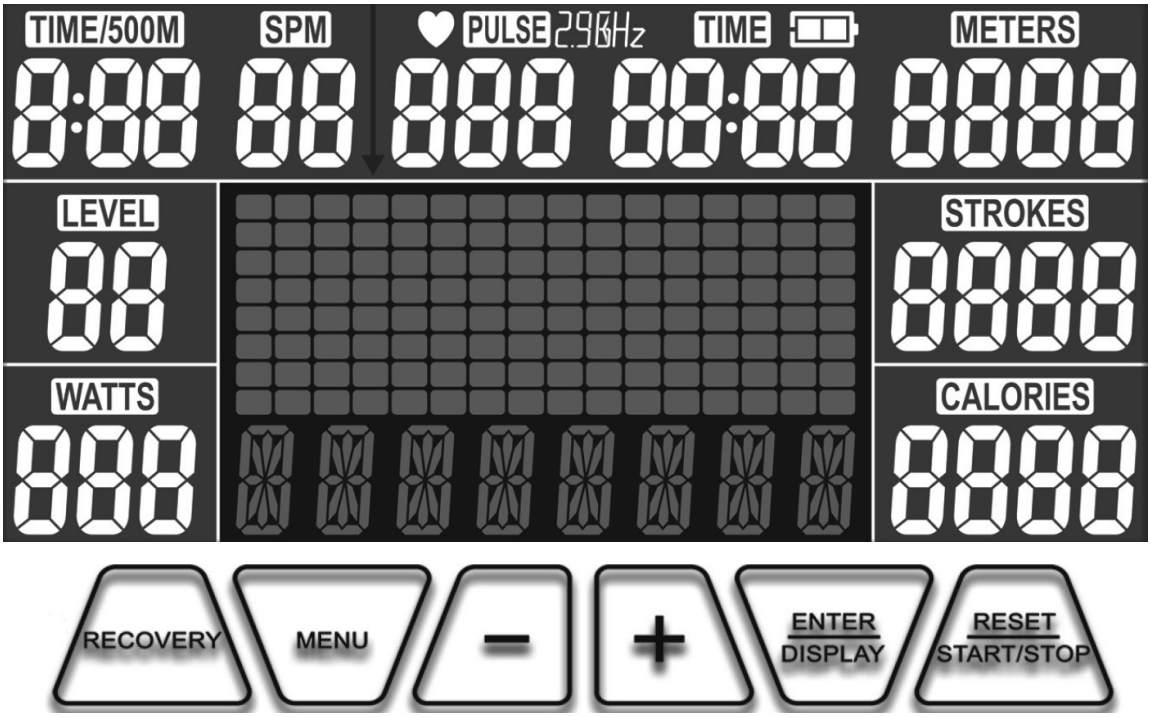

DISPLAY FUNCTIONS

FUNCTION	DESCRIPTION	SPECS
TIME	The time of each workout ,when starting exercise.	0M:00S ~ 99M:59s
TIME/500m	The time of each 500 metre at the current stroke velocity.	0M:00S ~ 99M:59s
DISTANCE	The distances of each workout ,when starting exercise.	0.0 ~ 9999 KM
PULSE	Heart rate during each workout.	30-230 BPM
CALORIE	The calories burned of each workout, when starting exercise.	0 ~ 9999KCAL
SPM	The strokes per minute, when starting exercise.	0 ~ 999 RPM
STROKES	The strokes of each workout, when starting exercise.	0~9999
LEVEL	Resistance level of your workout.	Level 1 ~ 16
WATTS	Workout power consumption.	0~999

KEY FUNCTIONS

FUNCTION	DESCRIPTION
RECOVERY	Measure your heart rate immediately after your workout.
MENU	Shortcut key to the Main Menu.
UP	Up key to choose workout or increase the resistance level.
DOWN	Down key to choose workout or increase the resistance level.
ENTER/ DISPLAY	Confirm setting or selection
RESET - START/STOP	Press start to start rowing. Press Stop to Display Workout Feedback. Hold down for 3 seconds to return back to the menu.

Note:

- Press + hold both select keys (UP & DOWN) for 3 seconds to access the Measurement System. Here you can enter your USER DATA.
- The flashing heart on the console is in sync with your Heart Rate. “- - -” indicates the computer is not reading your heart signal.
- For accurate heart measurements, use a compatible chest strap.

OPERATION:

AUTO POWER ON: The console will automatically turn on when the rowing machine is in use.

AUTO PAUSE: The console will automatically pause when you stop rowing during a workout.

AUTO POWER DOWN: The console will automatically power down when the rower is not in use after approx. 2 minutes. You can resume your workout before the computer turns off.

AUTO POWER OFF: The console will automatically turn off after approx 10 minutes. Workout data will be lost after this time.

PACER PROGRAM

The PACER PROGRAM allows you to row beside a pace boat on the console to help you pace your workout.

There are two ways to program the Pace Boat Time.

- Set the TIME/500M
- Set the TIME and METRES.

1. From the Main Menu, press the select keys to scroll and select the “PACER” Program.
   Press the ENTER Key to confirm your selection. NOTE: To return to the Main Menu press the MENU Key.
2. Press the SELECT Keys to scroll and select “GUEST USER” or one of 4x possible existing Users (e.g. “U1” or “U2” or “U3” or “U4”).
   Press the ENTER Key to confirm your selection.
3. TIME/500M:
   Press the SELECT Keys to scroll and select a “TIME/500M”.
   Press the ENTER Key to confirm your selection.
4. TIME and METRES
   Press the ENTER Key to bypass the TIME/500M selection.
   Press the SELECT Keys to scroll and select a “TIME”. Press the ENTER Key to confirm your selection.
   Press the SELECT Keys to scroll and select “METRES”. Press the ENTER Key to confirm your selection.
5. RESISTANCE LEVEL
   Press the SELECT Keys to scroll and select a Resistance “LEVEL”.
   PRESS the ENTER Key to confirm your selection.
6. TARGET VALUES are optional:
   To bypass all “TARGET VALUES” press and hold the ENTER Key.
   To bypass an individual “TARGET VALUE” press the ENTER Key.
   To select a “TARGET VALUE” press the SELECT Keys. Then, Press the ENTER Key to confirm your selection.
7. MAX ALARMS: are optional.
   To bypass all “ALARMS” press the START Key.
   To bypass an individual “ALARM” press the ENTER Key.
   To select a Maximum “ALARM” press the SELECT Keys. Press the ENTER Key to confirm your selection.
8. READY = START ROWING
   When you have reached the end of the selection process the computer will flash “READY” and the console will wait for you to Start Rowing before it begins the workout.

NOTE: You can adjust the Resistance Levels by pressing the select keys.

RACE PROGRAM

The RACE PROGRAM allows you to row against any USERS AVERAGE TIME/500M.

1. From the Main Menu, press the select keys to scroll and select the “RACE” Program.
   Press the ENTER Key to confirm your selection. NOTE: To return to the Main Menu press the MENU Key.
2. Press the SELECT Keys to scroll and select “GUEST USER” or one of 4x possible existing Users (e.g. “U1” or “U2” or “U3” or “U4”).
   Press the ENTER Key to confirm your selection.
3. USER TO RACE AGAINST: Press the SELECT Keys to scroll and select a “USER” to race against.
   Press the ENTER Key to confirm your selection. NOTE: To immediately start your workout press the START Key.
4. RESISTANCE LEVEL
   Press the SELECT Keys to scroll and select a Resistance “LEVEL”.
   PRESS the ENTER Key to confirm your selection.
5. TARGET VALUES are optional:
   To bypass all “TARGET VALUES” press and hold the ENTER Key.
   To bypass an individual “TARGET VALUE” press the ENTER Key.
   To select a “TARGET VALUE” press the SELECT Keys. Then, Press the ENTER Key to confirm your selection.
6. MAX ALARMS: are optional.
   To bypass all “ALARMS” press the START Key.
   To bypass an individual “ALARM” press the ENTER Key.
   To select a Maximum “ALARM” press the SELECT Keys. Press the ENTER Key to confirm your selection.
7. READY = START ROWING
   When you have reached the end of the selection process the computer will flash “READY” and the console will wait for you to Start Rowing before it begins the workout.

NOTE: You can adjust the Resistance Levels by pressing the select keys.

INTERVAL PROGRAMS

These two INTERVAL PROGRAMS are designed for Interval Training. NOTE: We suggest that you do not exceed 100% Heart Rate.

- INTERVAL DISTANCE PROGRAM = A target “DISTANCE” combined with timed rest periods
- INTERVAL TIME PROGRAM = A target “TIME” combined with timed rest periods

1. From the Main Menu, press the select keys to scroll and select the “INTERVAL” Program.
   Press the ENTER Key to confirm your selection. NOTE: To return to the Main Menu press the MENU Key.
2. Press the SELECT Keys to scroll and select “GUEST USER” or one of 4x possible existing Users (e.g. “U1” or “U2” or “U3” or “U4”).
   Press the ENTER Key to confirm your selection.
3. INTERVAL DISTANCE PROGRAM: Press the SELECT Keys to scroll and select the “DISTANCE” Program.
   Press the ENTER Key to confirm your selection.
4. INTERVAL TIME PROGRAM: Press the SELECT Keys to scroll and select the “TIME” Program.
   Press the ENTER Key to confirm your selection.
5. NUMBER OF INTERVALS: Press the SELECT Keys to scroll and select a Number of “INTERVAL”
   Press the ENTER Key to confirm your selection.
6. INTERVAL DISTANCE PROGRAM Press the SELECT Keys to scroll and select the Interval Distance in “METERS”.
   Press the ENTER Key to confirm your selection.
7. INTERVAL TIME PROGRAM
   Press the SELECT Keys to scroll and select a “INT TIME”.
   Press the ENTER Key to confirm your selection.
8. REST TIME: Press the SELECT Keys to scroll and select a “REST TIME”.
   Press the ENTER Key to confirm your selection.
   NOTE: To immediately start your workout press the START Key.
9. TARGET VALUES are optional:
   To bypass all “TARGET VALUES” press and hold the ENTER Key.
   To bypass an individual “TARGET VALUE” press the ENTER Key.
   To select a “TARGET VALUE” press the SELECT Keys. Then, Press the ENTER Key to confirm your selection.
10. MAX ALARMS: are optional.
    To bypass all “ALARMS” press the START Key.
    To bypass an individual “ALARM” press the ENTER Key.
    To select a Maximum “ALARM” press the SELECT Keys. Press the ENTER Key to confirm your selection.
11. READY = START ROWING
    When you have reached the end of the selection process the computer will flash “READY” and the console will wait for you to Start Rowing before it begins the workout.

NOTE: You can adjust the Resistance Levels by pressing the select keys.

HEART RATE CONTROL PROGRAMS

The HEART RATE PROGRAMS are designed to keep your heart rate/pulse at the constant level you have selected. Every 30 x seconds the computer will check your heart rate/pulse against what you have selected and will automatically adjust the Resistance LEVELS accordingly.

NOTE: All Heart Rate Programs require a heart rate signal via a compatible Chest Strap.

Heart Rate Control Programs:

- 60%
- 75%
- 90%

1. From the Main Menu, press the select keys to scroll and select the “HRC” Program.
   Press the ENTER Key to confirm your selection. NOTE: To return to the Main Menu press the MENU Key.
2. Press the SELECT Keys to scroll and select “GUEST USER” or one of 4x possible existing Users (e.g. “U1” or “U2” or “U3” or “U4”).
   Press the ENTER Key to confirm your selection.
3. SELECTING YOUR HEART RATE PROGRAM:
   Press the SELECT Keys to scroll and select either “60% HRC” or “75% HRC” or “90% HRC”.
   The console will automatically show your % Heart Rate calculation.
   Press the ENTER Key to confirm your selection.
   NOTE: To immediately start your workout press the START Key.
4. TARGET VALUES are optional:
   To bypass all “TARGET VALUES” press and hold the ENTER Key.
   To bypass an individual “TARGET VALUE” press the ENTER Key.
   To select a “TARGET VALUE” press the SELECT Keys. Then, Press the ENTER Key to confirm your selection.
5. MAX ALARMS: are optional.
   To bypass all “ALARMS” press the START Key.
   To bypass an individual “ALARM” press the ENTER Key.
   To select a Maximum “ALARM” press the SELECT Keys. Press the ENTER Key to confirm your selection.
6. READY = START ROWING
   When you have reached the end of the selection process the computer will flash “READY” and the console will wait for you to Start Rowing before it begins the workout.

NOTE:

- During your workout you cannot adjust your %HR or the Resistance LEVELS.
- Never select a target pulse that is higher than your age determined maximum pulse rate.
- During your workout you can press the DISPLAY Key to change the “Boat Bar Graph Display” to Profile Bar Graph Display.

TARGET HEART RATE PROGRAM

The Target Heart Rate Program is similar to the three other heart rate control programs.
You can adjust your Target Heart Rate value by pressing the SELECT Keys.

NOTE: All Heart Rate Programs require a heart rate signal via a compatible Chest Strap.

1. From the Main Menu, press the select keys to scroll and select the “HRC” Program.
   Press the ENTER Key to confirm your selection. NOTE: To return to the Main Menu press the MENU Key.
2. Press the SELECT Keys to scroll and select “GUEST USER” or one of 4x possible existing Users (e.g. “U1” or “U2” or “U3” or “U4”).
   Press the ENTER Key to confirm your selection.
3. THR PROGRAM:
   Press the SELECT Keys to scroll and select the “THR” Program.
   Press the ENTER Key to confirm your selection.
4. THR CONTROL VALUE
   Press the SELECT Keys to scroll and select a Target Heart Rate “CONTROL” Value.
   Press the ENTER Key to confirm your selection.
   NOTE: To immediately start your workout press the START Key.
5. TARGET VALUES are optional:
   To bypass all “TARGET VALUES” press and hold the ENTER Key.
   To bypass an individual “TARGET VALUE” press the ENTER Key.
   To select a “TARGET VALUE” press the SELECT Keys. Then, Press the ENTER Key to confirm your selection.
6. MAX ALARMS: are optional.
   To bypass all “ALARMS” press the START Key.
   To bypass an individual “ALARM” press the ENTER Key.
   To select a Maximum “ALARM” press the SELECT Keys. Press the ENTER Key to confirm your selection.
7. READY = START ROWING
   When you have reached the end of the selection process the computer will flash “READY” and the console will wait for you to Start Rowing before it begins the workout.

NOTE:

- During your workout you cannot adjust the Resistance LEVELS.
- Never select a target pulse that is higher than your age determined maximum pulse rate.
- During your workout you can press the DISPLAY Key to change the “Boat Bar Graph Display” to Profile Bar Graph Display.

WATTS PROGRAM

The WATTS PROGRAM is designed to keep your watt output at a constant level you have selected. Every 10 x seconds the computer will check your Watts output against what you have selected and will automatically adjust the Resistance LEVELS accordingly. During your workout you can adjust the Watts Value by pressing the SELECT Keys.

1. From the Main Menu, press the select keys to scroll and select the "'WATTS" Program.
   Press the ENTER Key to confirm your selection. NOTE: To return to the Main Menu press the MENU Key.
2. Press the SELECT Keys to scroll and select "GUEST USER" or one of 4x possible existing Users (e.g. "U1" or "U2" or "U3" or "U4").
   Press the ENTER Key to confirm your selection.
3. WATTS CONTROL VALUE
   Press the SELECT Keys to scroll and select a Watts "CONTROL" Value.
   Press the ENTER Key to confirm your selection.
   NOTE: To immediately start your workout press the START Key.
4. TARGET VALUES are optional:
   To bypass all "TARGET VALUES" press and hold the ENTER Key.
   To bypass an individual "TARGET VALUE" press the ENTER Key.
   To select a "TARGET VALUE" press the SELECT Keys. Then, Press the ENTER Key to confirm your selection.
5. MAX ALARMS: are optional.
   To bypass all "ALARMS" press the START Key.
   To bypass an individual "ALARM" press the ENTER Key.
   To select a Maximum "ALARM" press the SELECT Keys. Press the ENTER Key to confirm your selection.
6. READY = START ROWING
   When you have reached the end of the selection process the computer will flash "READY" and the console will wait for you to Start Rowing before it begins the workout.

NOTE:

- During your workout you cannot adjust the Resistance LEVELS.
- During your workout you can press the DISPLAY Key to change the "Boat Bar Graph Display" to Profile Bar Graph Display.

CALCULATING TARGET HEART RATE

Refer to the target heart rate chart below to calculate your THR at 60%, 75% and 90%, that is our suggested training zone. We also suggest that you start your workouts at the 60% THR and increase your THR % as your fitness improves.

TARGET HEART RATE FORMULA: 220 - AGE x THR%
(e.g. 220 - 30 years old x 60% = THR 114)

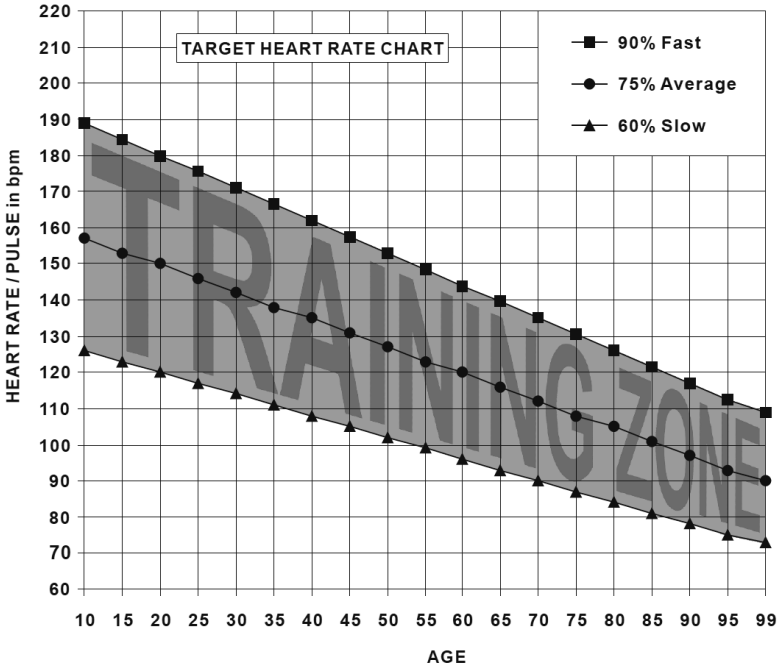

PROFILE PROGRAMS

The console with adjust the resistance LEVEL according to the PROFILE PROGRAM you select.

1. From the Main Menu, press the select keys to scroll and select the “PROFILES” Program. Press the ENTER Key to confirm your selection. NOTE: To return to the Main Menu press the MENU Key.
2. Press the SELECT Keys to scroll and select “GUEST USER” or one of 4x possible existing Users (e.g. “U1” or “U2” or “U3” or “U4”).
   Press the ENTER Key to confirm your selection.
3. PROFILE SELECTION:
   Press the SELECT Keys to scroll and select a “PROFILE”.
   Press the ENTER Key to confirm your selection.
4. PROFILE ADJUSTMENT:
   Press the SELECT Keys to Adjust the Profile up or down.
   Press the ENTER Key to confirm your selection.
   NOTE: To immediately start your workout press the START Key.
5. TARGET VALUES are optional:
   To bypass all “TARGET VALUES” press and hold the ENTER Key.
   To bypass an individual “TARGET VALUE” press the ENTER Key.
   To select a “TARGET VALUE” press the SELECT Keys. Then, Press the ENTER Key to confirm your selection.
6. MAX ALARMS: are optional.
   To bypass all “ALARMS” press the START Key.
   To bypass an individual “ALARM” press the ENTER Key.
   To select a Maximum “ALARM” press the SELECT Keys. Press the ENTER Key to confirm your selection.
7. READY = START ROWING
   When you have reached the end of the selection process the computer will flash “READY” and the console will wait for you to Start Rowing before it begins the workout.

NOTE:

- During your workout you can adjust the Resistance LEVELS by pressing the select keys.
- During your workout you can press the DISPLAY Key to change the “Boat Bar Graph Display” to Profile Bar Graph Display.

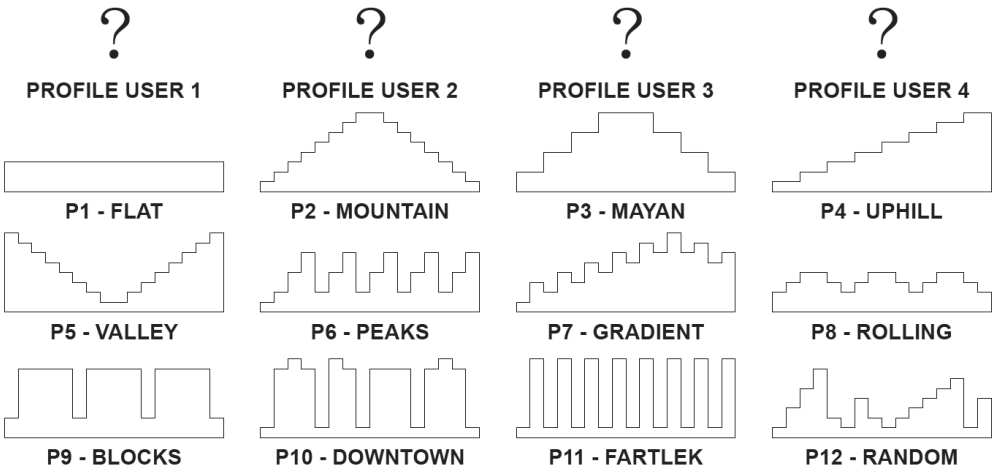

FITNESS TEST

A five minute Fitness Test based on your heart rate recovery. You must provide the computer with a heart rate signal via a compatible Chest Strap. Row as fast as you can for five minutes to get your heart rate to maximum. Then the computer will test heart rate recovery for one minute.

1. From the Main Menu, press the select keys to scroll and select the “FIT TEST” Program.
   Press the ENTER Key to confirm your selection.
   NOTE: To return to the Main Menu press the MENU Key.
2. START ROWING: Remember to STOP rowing immediately after the five minutes are up.

NOTE:

- During your workout you cannot adjust the Resistance LEVEL.
- The Fit Test Program will be constantly changing the Resistance LEVELS automatically.

USER DATA

You can store four sets of personal USER DATA. This stored information will be used in conjunction with the Percentage Heart Rate Programs, and to more accurately calculate your Calorie expenditure and compute your “End of Workout Display” which includes your BMI, BMR and TDEE.

REMEMBER: It’s important to keep your USER DATA up-to-date otherwise the computer will give you false readings, such as Heart Rate Percentage, expended Calories, BMI, BMR & TDEE.

NOTE: The computer will not memorize any input Guest User selections.

1. USER DATA: From the Main Menu, press the SELECT Keys to scroll and select “USER DATA”.
   Press the ENTER Key to confirm your selection.
   NOTE: To return to the Main Menu press the MENU Key.
2. SELECT USER: Press the SELECT Keys to scroll and select “NEW USER” or one of 4x possible existing Users.
   Press the ENTER Key to confirm your selection.
3. NAME: Press the SELECT Keys to scroll and select a “ALPHANUMERIC LETTER or DIGIT”.
   Press the ENTER Key to confirm your selection. Repeat this process until your NAME is complete. Then press and hold the ENTER Key to bypass all remaining selections / jump to the next stage.
4. SEX - GENDER: Press the SELECT Keys to scroll and select your “SEX”.
   Press the ENTER Key to confirm your selection.
5. AGE: Press the SELECT Keys to scroll and select your “AGE” in years only.
   Press the ENTER Key to confirm your selection.
6. HEIGHT: Press the SELECT Keys to scroll and select your “HEIGHT”.
   Press the ENTER Key to confirm your selection.
7. WEIGHT: Press the SELECT Keys to scroll and select your “WEIGHT”.
   Press the ENTER Key to confirm your selection.
8. ACTIVE FACTOR: Press the SELECT Keys to scroll and select your “ACTIVE” Factor.
   Press the ENTER Key to confirm your selection.

USER PROFILE

Each user can design their own Custom Profile Program. All profiles use the Bar Graph Display being 8x Rows High = 16 Resistance Levels and 16x Columns Long = 16x Time Intervals.

During your workout the computer will automatically adjust the Resistance LEVELS according to the PROFILE you design and you can also adjust the Resistance LEVELS with the SELECT Keys.

REMEMBER: It's important to keep your USER DATA up-to-date otherwise the computer will give you false readings, such as Heart Rate Percentage, expended Calories, BMI, BMR & TDEE.

1. USER PROFILE:
   From the Main Menu, press the SELECT Keys to scroll and select "USER PRO".
   Press the ENTER Key to confirm your selection.
   NOTE: To return to the Main Menu press the MENU Key.
2. SELECT USER PROFILE:
   Press the SELECT Keys to scroll and select one of 4x possible existing User Profiles.
   Press the ENTER Key to confirm your selection.
   NOTE: If there are no User Profiles shown then go to User Data to create a User.
3. PROFILE CREATION:
   Press the SELECT Keys to scroll and select a "Resistance LEVEL".
   Press the ENTER Key to confirm your selection. Repeat this process until your PROFILE is complete.

NOTE: To bypass all the remaining columns, press and hold the ENTER Key. This is extremely useful when making small adjustments to your custom PROFILE.

DELETE AN EXISTING USER

1. USER DELETE
   From the Main Menu, press the SELECT Keys to scroll and select "USER DEL".
   Press the ENTER Key to confirm your selection.
   NOTE: To return to the Main Menu press the MENU Key.
2. SELECT USER
   Press the SELECT Keys to scroll and select one of 4x possible existing Users.
   Press the ENTER Key to confirm your selection.
3. VERIFY DELETION
   Press the ENTER Key again to reconfirm Deletion.

MEASUREMENT SELECTION

For User Data HEIGHT and WEIGHT input there is the choice between metric or imperial measurements.

1. Press and hold both SELECT Keys for 3x seconds.
   Press the SELECT Keys to scroll and select either "METRIC" or "IMPERIAL".
   Press the ENTER Key to confirm your selection.

RECOVERY PROGRAM

The RECOVERY PROGRAM is an excellent cardiovascular fitness level indicator. The RECOVERY PROGRAM will evaluate your cardiovascular fitness level by measuring how quickly your heart rate recovers over a period of one minute immediately at the end of your workout. For the entire 60 countdown it is essential that you provide the computer with a heart rate signal via a compatible Chest Strap. The computer will display your cardiovascular fitness recovery score from 0-100.

1. ACTIVATE THE RECOVERY PROGRAM
   Immediately at the end of your workout press the “RECOVERY Key”.
2. RETURN TO THE MAIN MENU
   To return to the “MAIN MENU” press the MENU Key.

80-100	OUTSTANDING
80-65	EXCELLENT
65-50	GOOD
50-40	FAIR
40-20	BELOW AVERAGE
20-0	POOR

TARGET VALUES

TIME - METERS - STROKES - CALORIES Target Values are optional. If you do not select any of these optional Target Values then the computer will count from zero upwards. If you select one or more of these optional Target Values then the computer will countdown from your selection.
The computer will stop your workout and sound an alarm for once the FIRST Target Value has been achieved.

- TIME 5:00 ~ 99:00 minutes (in 1x minute steps)
- METERS 100 ~ 9,900 Meters (in 100x Meter steps)
- STROKES 10 ~ 9,990 strokes (in 10x Stroke steps)
- CALORIES 10 ~ 9,990 Calories (in 10x Calorie steps)

TARGET VALUES are optional:
To bypass all “TARGET VALUES” press and hold the ENTER Key.

1. To bypass an individual “TARGET VALUE” press the ENTER Key.
   To select a “TARGET VALUE” press the SELECT Keys.
   Press the ENTER Key to confirm your selection.

WARM-UP EXERCISE

Warm up exercise is important in preparing the muscles for activity whilst minimising the risk of injury. You may choose to warm up with a light/brisk walking pace for 5-10 minutes before stopping and performing some simple stretches. (As shown in the pictures below)

— Hamstring Stretch (Standing) Keep your knees slightly bent and slowly lean forward, back and shoulders relaxed, reaching towards your toes. You should feel the tension and slight discomfort in your hamstring muscles. Hold for 15-20 seconds. Repeat 2-3 times.

— Hamstrings Stretches (Seated) Sitting on the floor preferably on a mat, put one leg straight, the other inward and close to the inside of the straight leg. Lean forward from the hips, reaching towards your toes. Hold for 10-15 seconds, and relax. Repeat 3 times for each leg (See picture 2).

— Crus and Feet Tendon Stretches Standing with two hands on the wall or tree, one leg behind. Keeping your legs straight and the heel on the ground, lean forward towards the wall or tree. Hold for 10-15 seconds, and relax. Repeat 3 times for each leg (See picture 3).

— Quadriceps Stretches Keeping your balance with your left hand holding onto a wall or stationery fixture, grasp your right foot with your right hand and stretch your right heel toward your buttocks slowly, until you feel the stretch in the front of your thigh. Hold for 10-15 seconds, and relax. Repeat 3 times for each leg (See picture 4).

— Sartorius (Inner Muscles of the Thigh) Muscle

— Stretches Sitting down with the soles of your feet or shoes together and your knees positioned outward. Pull your feet towards your groin until you can feel the stretch. Hold for 10-15 seconds, and relax. Repeat 3 times (See picture 5).

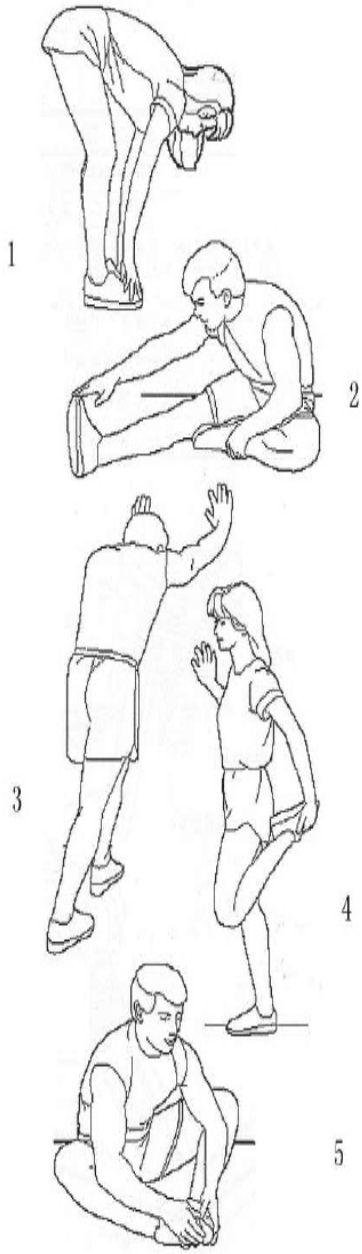

ROWING TECHNIQUES

The Rowing Action uses 84% of your muscle mass; from the tips of the fingers holding the handle, to the balls of the feet connected to the footboard, all the muscles between these 2 points contribute to the Rowing Action.

The Rowing Action is comprised of both fast (drive phase) and slow (recovery phase) movements. It is important to combine these 2 movements into a rhythm in order to create a smooth, flowing, unhurried Rowing Action. The diagrams below show 3 basic movements of the rowing action.

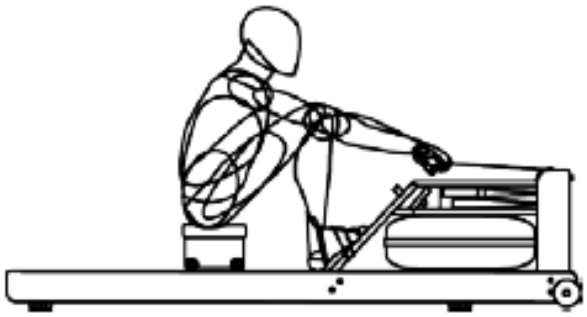

CATCH POSITION

Sitting tall, arms straight reaching forward, shoulders relaxed, head up, eyes looking forward, legs compressed and shins vertical.

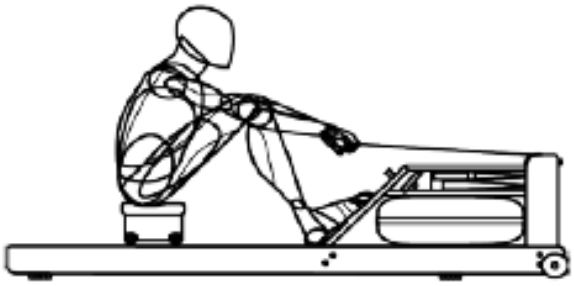

DRIVE PHASE

Drive back with the legs, arms hang off the handle and only begin to bend once handle is above the knees, torso is strong with good posture and body angle opens up slowly as you drive the legs.

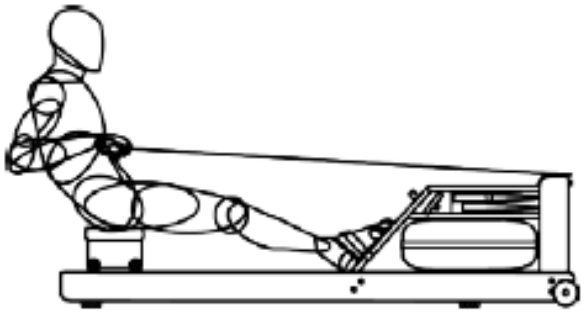

RELEASE POSITION

Legs straight, handle drawn to chest, sitting back just past the vertical, torso firm, shoulders relaxed, head up and eyes looking forward.

Allow yourself the first few rowing sessions to practice the correct positions and phases as well as the correct ratio and rhythm of the rowing action. With regular rowing, the technique will become easier and you will soon experience the physiological benefits of rowing.

TRAINING STAGES

Beats Per Minute	Exercise Zone	AGE								
		20	25	30	35	40	45	50	55	60	70
100%	VO2 Max (Maximum Effort)	200	195	190	185	180	175	170	165	155	150
90%		180	176	171	167	162	158	153	149	140	135
80%	Anaerobic (Hardcore Training)	160	156	152	148	144	140	136	132	124	120
70%	Aerobic (Cardio Training/Endurance)	140	137	133	130	126	123	119	116	109	105
60%	Weight Control (Fitness/Fat Burn)	120	117	114	111	108	105	102	99	93	90
50%	Moderate Activity (Maintenance/Warm up)	100	98	95	93	90	88	85	83	78	75

Cardiovascular training plays an important part in maintaining a healthy heart and lung function, so it's no surprise we should be paying attention to how quickly our heart beats during exercise. The chart above outlines a range of heart rate training zones determined by the individual's age and workout goals to ensure you train safely and effectively.

Heart Rate can be measured by using the radial (wrist) or carotid (neck) pulse using your index and middle fingers, counting the beats for 10 seconds and multiplying by 6. Alternatively, the use of a Wireless Telemetry Heart Rate strap and watch will give you an accurate Beats Per Minute (BPM) reading.

220 – AGE = TMHR (Theoretical Maximum Heart Rate)

TMHR x 85% = (Upper Training Limit) bpm (Beats per Minute)

TMHR x 65% = (Lower Training Limit) bpm

Note: Contact heart rate may provide innaccurate readings and is designed only as a guide

Example: 220 – 39 = 181 bpm

181 x 85% (0.85) = 154 bpm (Upper Training Limit)

181 x 65% (0.65) = 118 bpm (Lower Training Limit)

PARTS LIST

PART NO.	DESCRIPTION	Q'TY
1	Aluminium Beam	1
2	Main Frame	1
3	Pivot Bracket	1
4	Front Stabiliser	1
5	Rear Stabiliser	1
6	Rear Bracket	1
7	Ali Handle Bar	1
8	Seat Carriage	2
9	Seat Carriage Shaft Roller	2
10	Adjustable Bolt Roller	4
11	Adjustable Plate Foot	4
12	Foot Pedal	1
13	Computer Arm	1
14	Cutch Shaft	1
15	Return Spring	1
16	Roller Space	2
17	Stopper Bracket	1
18	Strap Holder	2
19	Knob Stud	1
20	Spring	2
21	Handle	1
22	Computer Arm Plug	2
23	Computer Arm Pivot	2
24	Computer Arm Plug Cover	2
25	Computer Case Nut Cover	2
26	Computer Arm Spacer	2
27	"V" Cover	1
28	Cover Main - Right	1
29	Cover Main - Left	1
30	Wheel	4
31	Standard Cap	4
32	Aluminium Beam End Cap	1
33	Carriage Cover	2
34	Seat Carriage Roller Seat	4
35	Plug	1
36	Foam Grip	1
37	Carriage Stopper	1
38	Cover Vent	4
39	Strap Slot Trim	1
40	Poly "V" Drive Belt	1
41	Drive Pulley	1

PART NO.	DESCRIPTION	Q'TY
42	Strap Drum	1
43	Return Spring - Drum	1
44	Return Spring - Cover	1
45	Return - Holder	1
46	Flywheel Fan	1
47	Special Seat Roller	2
48	Heel Rest	2
49	Plug	2
50	Plug	1
51	Heel Rest Holder	2
52	Bushing	2
53	Ball Knob	2
54	Sensor Holder	1
55	Receiver Cover	1
56	Strap Trim	4
57	Infrared Transmitter - Top	1
58	Infrared Transmitter-Battery Holder	1
59	Infrared Transmitter- Bottom	1
60	Nut- M6	2
61	Nut - 3/8"- 26UNF	2
62	Nut - 3/16"	1
63	Nut - M6	8
64	Nut - M8	10
65	Nut- 3/8"-26UNF	2
66	Nut - 3/16"	1
67	Nut - M6	8
68	Nut - M8	10
69	Nut - 3/8"- 26UNF	2
70	Nut- M8 Long Dom Nut	2
71	Nut- 1/2"-26UNF	1
72	Bolt - M5x12mm	4
73	Bolt - M4x6mm	8
74	Bolt - M8x16mm	10
75	Bolt - M8x40mm	2
76	Bolt - M8x60mm	2
77	Bolt - M8x30mm	2
78	Bolt - M8x90mm	1
79	Bolt - M8x120mm	1
80	Bolt - 3/6" x1-/4"	1
81	Bolt - M5x10mm	2
82	Bolt - M6x10mm	2

PARTS LIST

PART NO.	DESCRIPTION	Q'TY
83	Bolt - M6x20mm	2
84	Bolt - M8x16mm	10
85	Bolt - M8x60mm	2
86	Bolt - M10x12mm	2
87	U-Bolt	1
88	Bolt - M5x8mm	4
89	Washer - M8x012x1T	2
90	Washer - M8x012x2T	4
91	Washer - M8x016x2T	6
92	Washer - M8x023x2T	4
93	Washer - M8x018x2T	2
94	Washer - M10x017x2.3T	2
95	Screw - M3x10mm	5
96	Screw - M4x12mm	12
97	Screw - M4x20mm	3
98	Screw - M2x10mm	4
99	Screw - M4x10mm	1
100	Screw - M4x15mm	1
101	Retaining Ring	1
102	Tension Cable	2
103	Motor	1
104	Motor Sensor Cable	1
105	Computer Cable	1
106	Computer Cable	1
107	Computer Cable	1
108	Sensor Cable	1
109	Sensor Magnet	4
110	Drive Strap	1
111	Foot Strap	2
112	Chest Band Reciever	1
113	AC Adaptor Cable	1
114	Computer	1
115	AC Adaptor	1
116	AC Cable	1
117	Bearing	2
118	Bearing	1
119	Bearing	1
120	Clutch	1
121	Seat	1
		1
		1

EXPLODED DRAWING

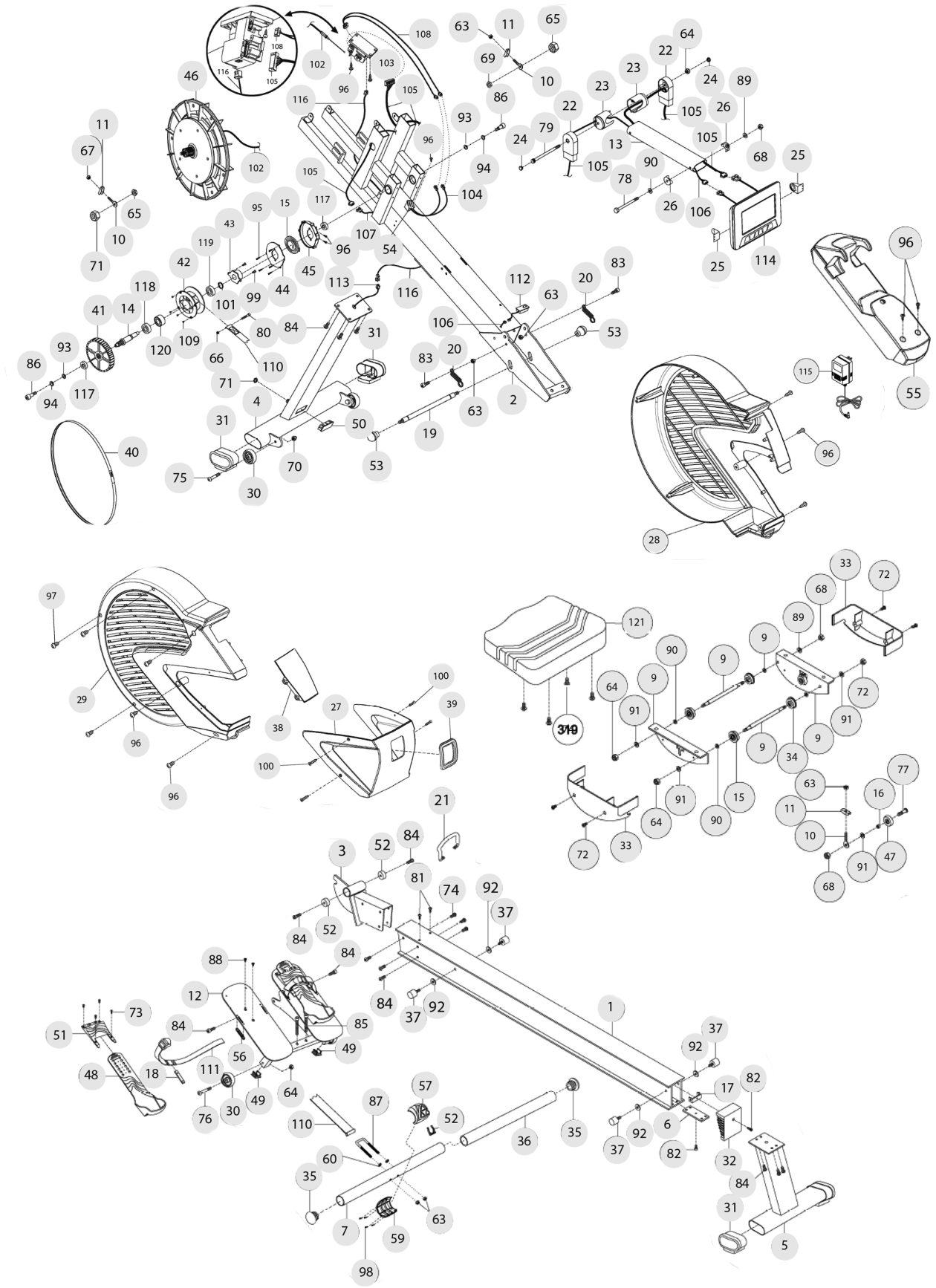

For more information about our Elite Fitness equipment or other brands that we stock for your home, visit www.elitefitness.co.nz

Copyright © 2021 Elite Fitness

Elite Fitness, 28 Morrin Road, St Johns, Auckland, New Zealand.
0800 243 834, www.elitefitness.co.nz

Keep up to date with the latest products, competitions and equipment, follow us on our social media sites.

@EliteFitnessNZ

@EliteFitnessTV